Insert bearing UCX06 FYH

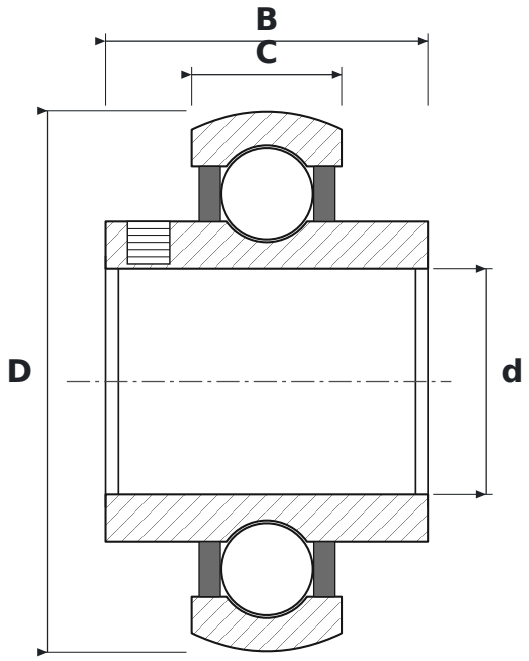

DIMENSIONS

d	bore diameter	**30 mm**
D	outside diameter	**72 mm**
B	inner ring width	**42.9 mm**
C	outer ring width	**20 mm**

SPECIFICATIONS

Manufacturer	**FYH**
Manufacturer designation	**UCX06**
C – outer ring width	**20 mm**
Rolling elements	**single-row ball bearing**
Radial internal clearance	**CN – normal**