Insert bearing XG205 NPPB SKF

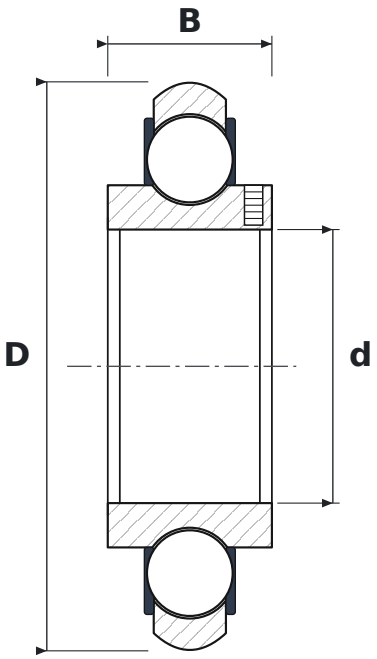

DIMENSIONS

d	bore diameter	**25 mm**
D	outside diameter	**52 mm**
B	inner ring width	**15 mm**

SPECIFICATIONS

Manufacturer	**SKF**
Manufacturer designation	**XG205 NPPB**
Rolling elements	**single-row ball bearing**
2RS	**contact rubber seals, both sides**
B	**40° contact angle**
Radial internal clearance	**CN – normal**