Insert bearing YAT203 SKF

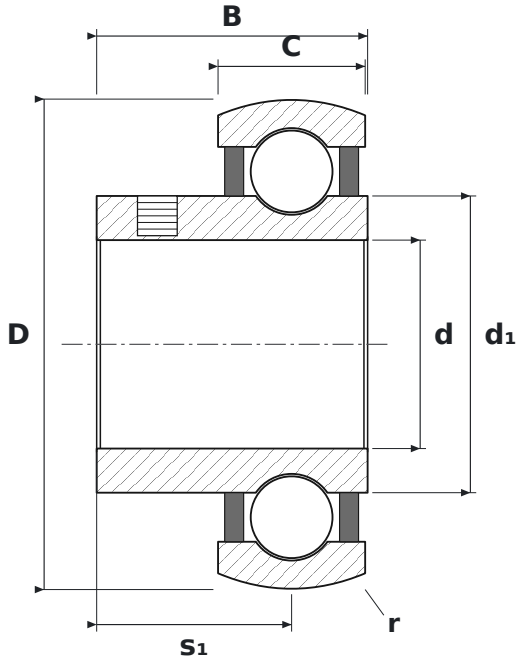

DIMENSIONS

d	bore diameter	**17 mm**
D	outside diameter	**40 mm**
B	inner ring width	**22.1 mm**
C	outer ring width	**12 mm**
s1	inner ring face (locking side) to outer ring centre	**15.9 mm**
d1	inner ring outside diameter	**24.2 mm**
r	chamfer dimension (min.)	**0.3 mm**

SPECIFICATIONS

Manufacturer	**SKF**
Manufacturer designation	**YAT203**
B – inner ring width	**22.1 mm**
C – outer ring width	**12 mm**
r min – chamfer dimension	**0.3 mm**
Rolling elements	**single-row ball bearing**
Seal	**open – no seals**
Radial internal clearance	**CN – normal**