Spindle bearing HC7003 ETP4SUL FAG

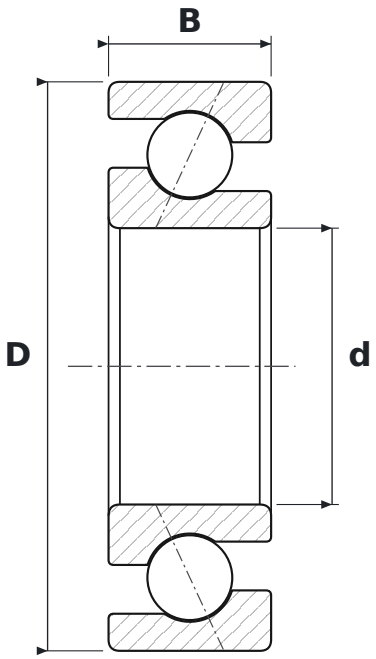

DIMENSIONS

d	bore diameter	**17 mm**
D	outside diameter	**35 mm**
B	width	**10 mm**

SPECIFICATIONS

Manufacturer	**FAG**
Manufacturer designation	**HC7003 ETP4SUL**
Rolling elements	**single-row ball bearing**
Contact angle	**25°**
HC70	**wysokoobrotowe z kulkami ceramicznymi, otwarte**
E	**contact angle 25°**
T	**hard fabric window cage, guided on the outer ring**
P4S	**tolerance class P4S**
UL	**universal design – can be combined in any arrangement; a pair gives lekkie napięcie wstępne**
Seal	**open – no seals**