# Spindle bearing HC71900 ETP4SUL FAG

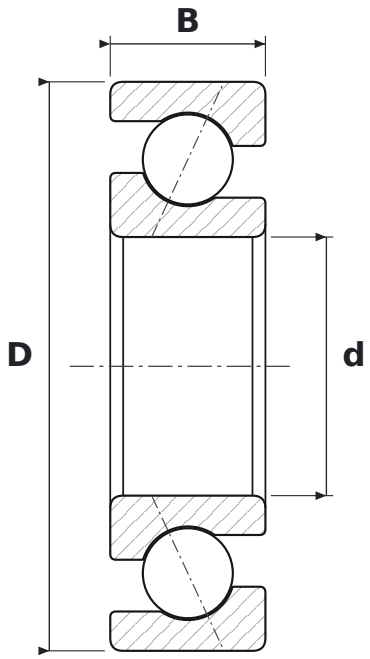


## DIMENSIONS

| | | |
|---|---|---|
| **d** | bore diameter | **10 mm** |
| **D** | outside diameter | **22 mm** |
| **B** | width | **6 mm** |

## SPECIFICATIONS

| | |
|---|---|
| Manufacturer | **FAG** |
| Manufacturer designation | **HC71900 ETP4SUL** |
| Rolling elements | **single-row ball bearing** |
| Contact angle | **25°** |
| HC719 | **wysokoobrotowe z kulkami ceramicznymi, otwarte** |
| E | **contact angle 25°** |
| T | **hard fabric window cage, guided on the outer ring** |
| P4S | **tolerance class P4S** |
| UL | **universal design – can be combined in any arrangement; a pair gives lekkie napięcie wstępne** |
| Seal | **open – no seals** |