Spindle bearing HC71902 CTP4SUL FAG

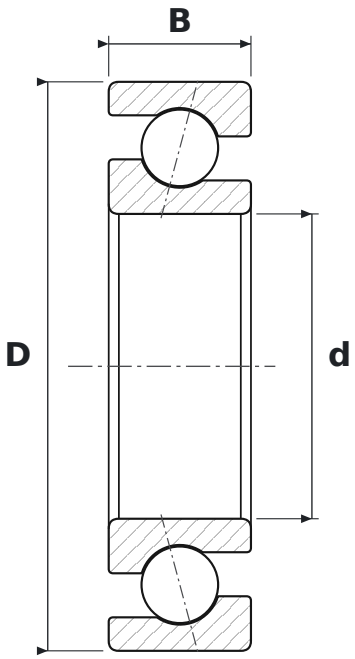

DIMENSIONS

d	bore diameter	**15 mm**
D	outside diameter	**28 mm**
B	width	**7 mm**

SPECIFICATIONS

Manufacturer	**FAG**
Manufacturer designation	**HC71902 CTP4SUL**
Rolling elements	**single-row ball bearing**
Contact angle	**15°**
HC719	**wysokoobrotowe z kulkami ceramicznymi, otwarte**
C	**contact angle 15°**
T	**hard fabric window cage, guided on the outer ring**
P4S	**tolerance class P4S**
UL	**universal design – can be combined in any arrangement; a pair gives lekkie napięcie wstępne**
Seal	**open – no seals**