Spherical plain bearing 365442 SKF

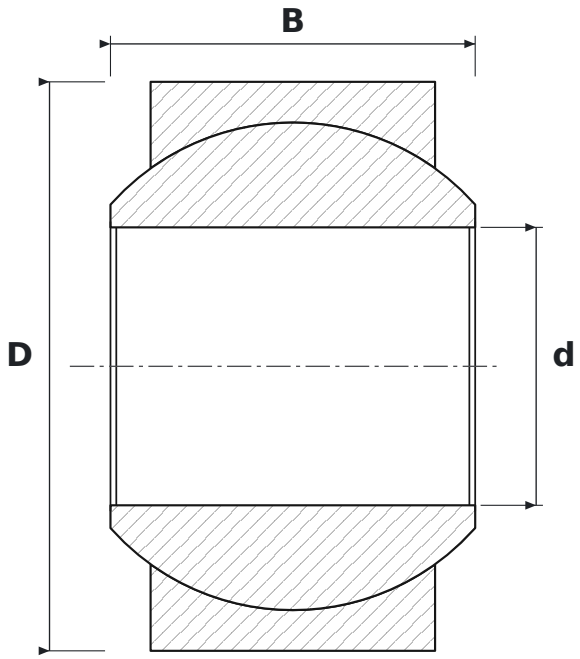

DIMENSIONS

d	bore diameter	**19.05 mm**
D	outside diameter	**39 mm**
B	inner ring (ball) width	**25 mm**

SPECIFICATIONS

Manufacturer	**SKF**
Manufacturer designation	**365442**
Rolling elements	**plain bearing (no rolling elements)**
Seal	**open – no seals**