Spherical plain bearing BLRB365214 B2RS SKF

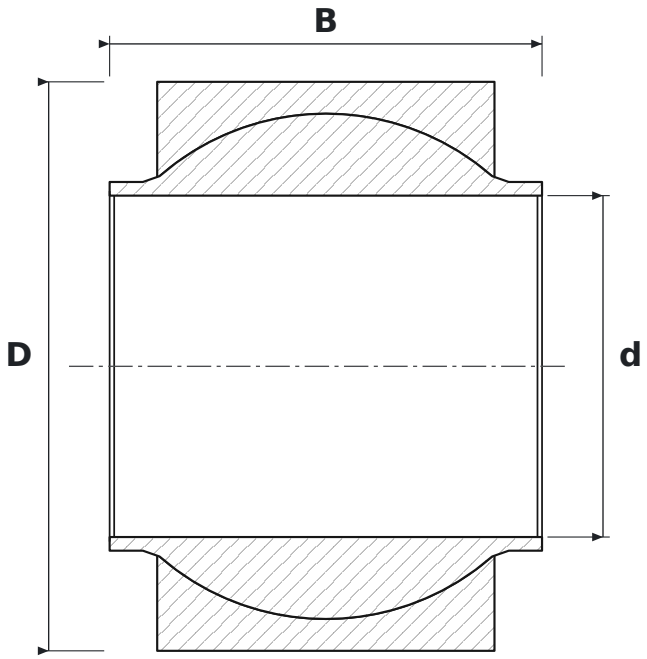

DIMENSIONS

d	bore diameter	**45 mm**
D	outside diameter	**75 mm**
B	inner ring (ball) width	**57 mm**

WHAT BLRB365214 B2RS MEANS

B	40° contact angle
2RS	uszczelnienia dwuwargowe stykowe, dwustronne

SPECIFICATIONS

Manufacturer	**SKF**
Manufacturer designation	**BLRB365214 B2RS**
Rolling elements	**plain bearing (no rolling elements)**