Spherical plain bearing BLRB365217 A2RS SKF

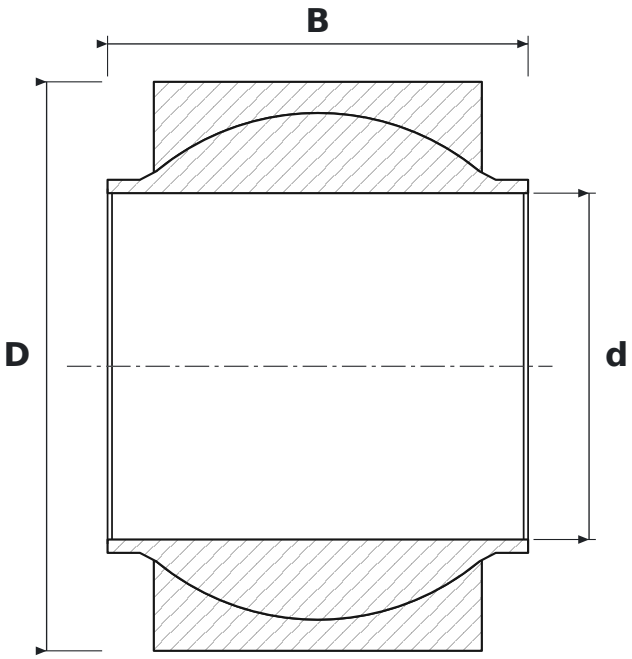

DIMENSIONS

d	bore diameter	**70 mm**
D	outside diameter	**115 mm**
B	inner ring (ball) width	**85 mm**

SPECIFICATIONS

Manufacturer	**SKF**
Manufacturer designation	**BLRB365217 A2RS**
Rolling elements	**plain bearing (no rolling elements)**
2RS	**uszczelnienia dwuwargowe stykowe, dwustronne**
Mass	**3.1 kg**