Spherical plain bearing BLRB366746 A SKF

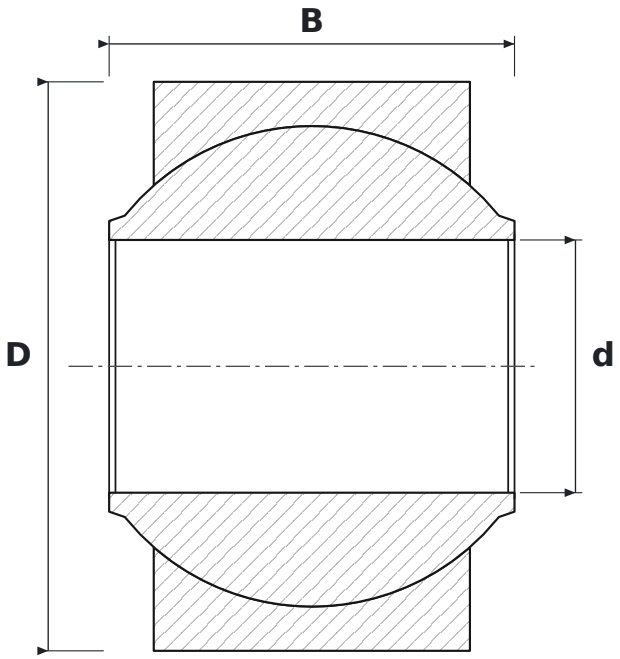

DIMENSIONS

d	bore diameter	**31.75 mm**
D	outside diameter	**71.48 mm**
B	inner ring (ball) width	**50.93 mm**

SPECIFICATIONS

Manufacturer	**SKF**
Manufacturer designation	**BLRB366746 A**
Rolling elements	**plain bearing (no rolling elements)**
Seal	**open – no seals**