Spherical plain bearing DGE110 UK2RS INNE

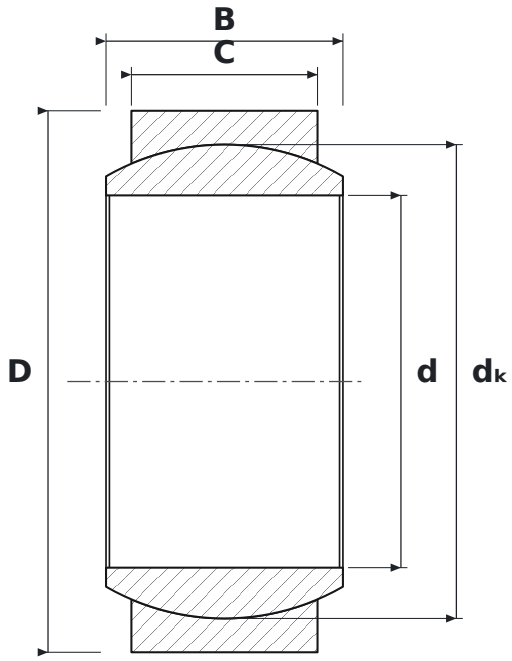

DIMENSIONS

d	bore diameter	**110 mm**
D	outside diameter	**160 mm**
B	inner ring (ball) width	**70 mm**
C	outer ring width	**55 mm**
dK	ball diameter	**140 mm**

SPECIFICATIONS

Manufacturer	**INNE**
Manufacturer designation	**DGE110 UK2RS**
C – outer ring width	**55 mm**
Rolling elements	**plain bearing (no rolling elements)**
K	**tapered bore, taper 1:12**
2RS	**contact rubber seals, both sides**
Mass	**4.82 kg**