# Spherical plain bearing DGE160 LO INNE

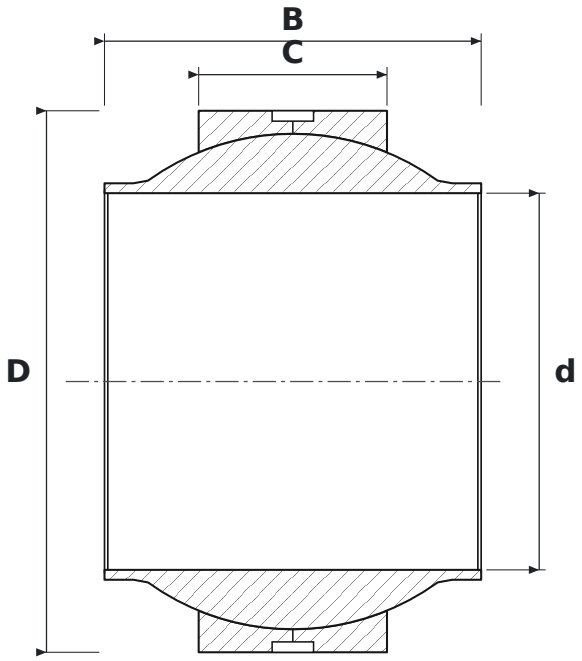


## DIMENSIONS

| | | |
|---|---|---|
| **d** | bore diameter | **160 mm** |
| **D** | outside diameter | **230 mm** |
| **B** | inner ring (ball) width | **160 mm** |
| **C** | outer ring width | **80 mm** |

## SPECIFICATIONS

| | |
|---|---|
| Manufacturer | **INNE** |
| Manufacturer designation | **DGE160 LO** |
| C – outer ring width | **80 mm** |
| Rolling elements | **plain bearing (no rolling elements)** |
| Seal | **open – no seals** |
| Features | **Lubrication groove and holes** |
| Mass | **16.5 kg** |