Spherical plain bearing DGE40 UK2RS INNE

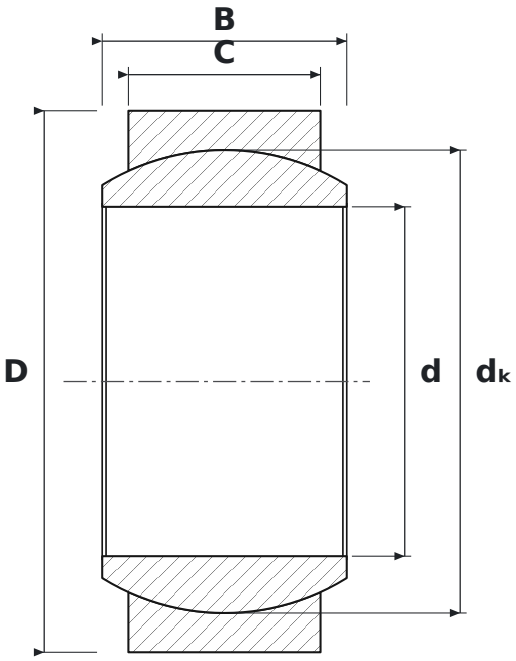

DIMENSIONS

d	bore diameter	**40 mm**
D	outside diameter	**62 mm**
B	inner ring (ball) width	**28 mm**
C	outer ring width	**22 mm**
dK	ball diameter	**53 mm**

SPECIFICATIONS

Manufacturer	**INNE**
Manufacturer designation	**DGE40 UK2RS**
C – outer ring width	**22 mm**
Rolling elements	**plain bearing (no rolling elements)**
Mass	**0.306 kg**