Spherical plain bearing DGE50 FW2RS INNE

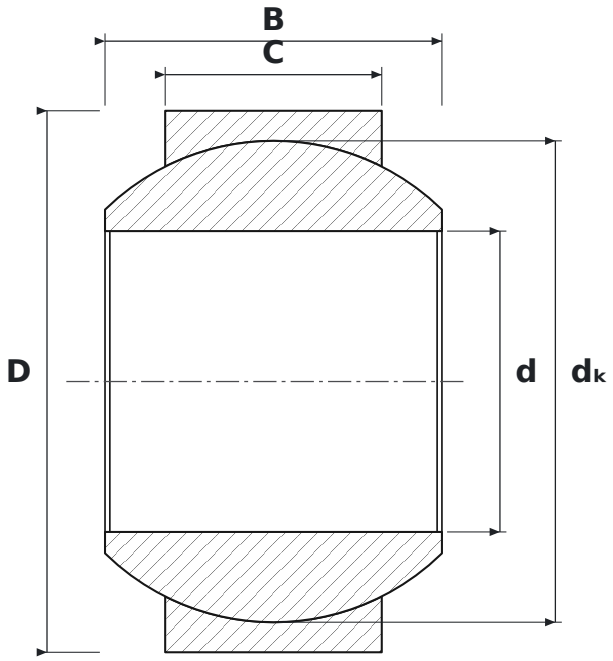

DIMENSIONS

d	bore diameter	**50 mm**
D	outside diameter	**90 mm**
B	inner ring (ball) width	**56 mm**
C	outer ring width	**36 mm**
dK	ball diameter	**80 mm**

SPECIFICATIONS

Manufacturer	**INNE**
Manufacturer designation	**DGE50 FW2RS**
C – outer ring width	**36 mm**
Rolling elements	**plain bearing (no rolling elements)**
Mass	**1.4 kg**