Spherical plain bearing DGE70 LO INNE

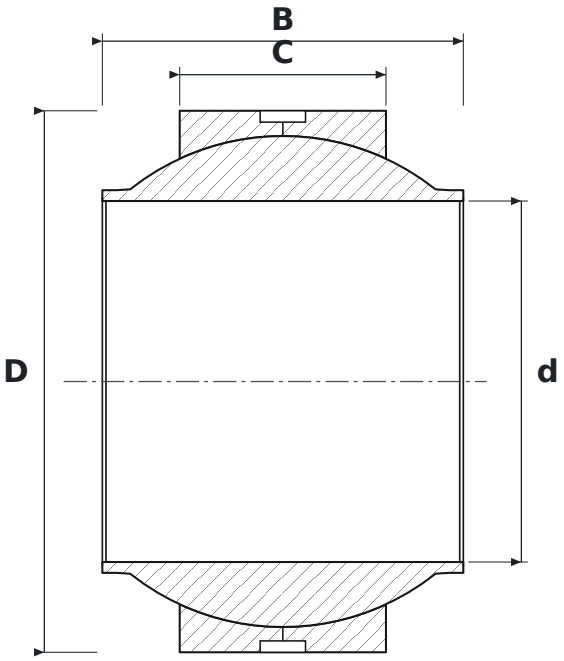

DIMENSIONS

d	bore diameter	**70 mm**
D	outside diameter	**105 mm**
B	inner ring (ball) width	**70 mm**
C	outer ring width	**40 mm**

SPECIFICATIONS

Manufacturer	**INNE**
Manufacturer designation	**DGE70 LO**
C – outer ring width	**40 mm**
Rolling elements	**plain bearing (no rolling elements)**
Features	**Lubrication groove and holes**
Mass	**1.71 kg**