Spherical plain bearing DGE75 SW INNE

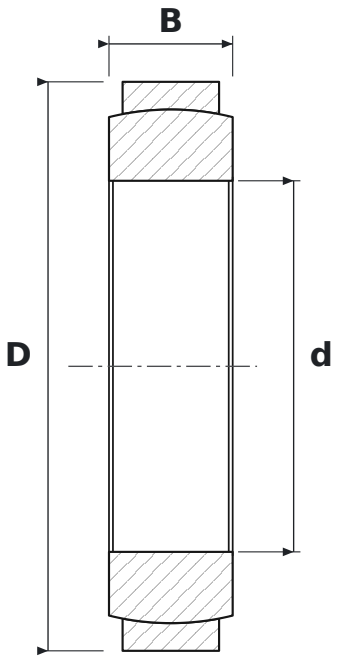

DIMENSIONS

d	bore diameter	**75 mm**
D	outside diameter	**115 mm**
B	inner ring (ball) width	**25 mm**

SPECIFICATIONS

Manufacturer	**INNE**
Manufacturer designation	**DGE75 SW**
Rolling elements	**plain bearing (no rolling elements)**
Mass	**1.1 kg**