Spherical plain bearing DGE80 AX INNE

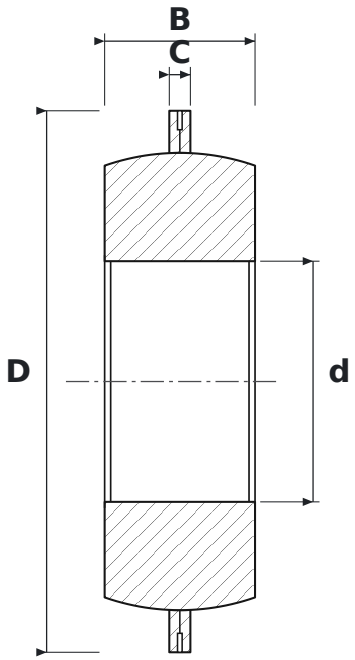

DIMENSIONS

d	bore diameter	**80 mm**
D	outside diameter	**180 mm**
B	inner ring (ball) width	**50 mm**
C	outer ring width	**7 mm**

SPECIFICATIONS

Manufacturer	**INNE**
Manufacturer designation	**DGE80 AX**
C – outer ring width	**7 mm**
Rolling elements	**plain bearing (no rolling elements)**
Features	**Lubrication groove and holes**
Mass	**7 kg**