Spherical plain bearing DGE80 UK2RS INNE

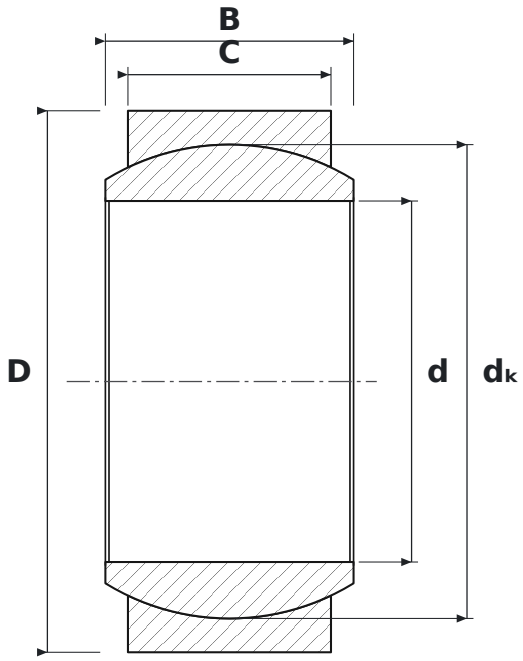

DIMENSIONS

d	bore diameter	**80 mm**
D	outside diameter	**120 mm**
B	inner ring (ball) width	**55 mm**
C	outer ring width	**45 mm**
dK	ball diameter	**105 mm**

SPECIFICATIONS

Manufacturer	**INNE**
Manufacturer designation	**DGE80 UK2RS**
C – outer ring width	**45 mm**
Rolling elements	**plain bearing (no rolling elements)**
Mass	**2.31 kg**