Spherical plain bearing DGE85 SX INNE

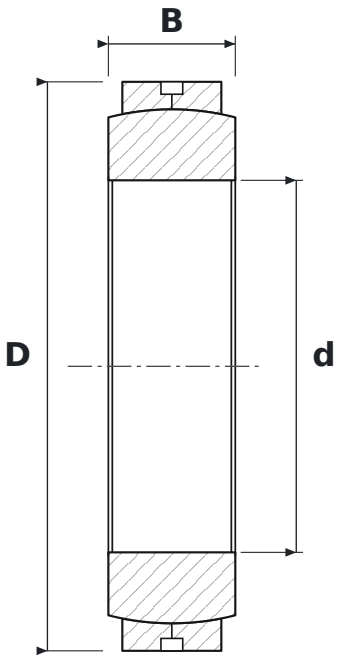

DIMENSIONS

d	bore diameter	**85 mm**
D	outside diameter	**130 mm**
B	inner ring (ball) width	**29 mm**

SPECIFICATIONS

Manufacturer	**INNE**
Manufacturer designation	**DGE85 SX**
Rolling elements	**plain bearing (no rolling elements)**
Features	**Lubrication groove and holes**
Mass	**1.6 kg**