Spherical plain bearing DGE90 FW2RS INNE

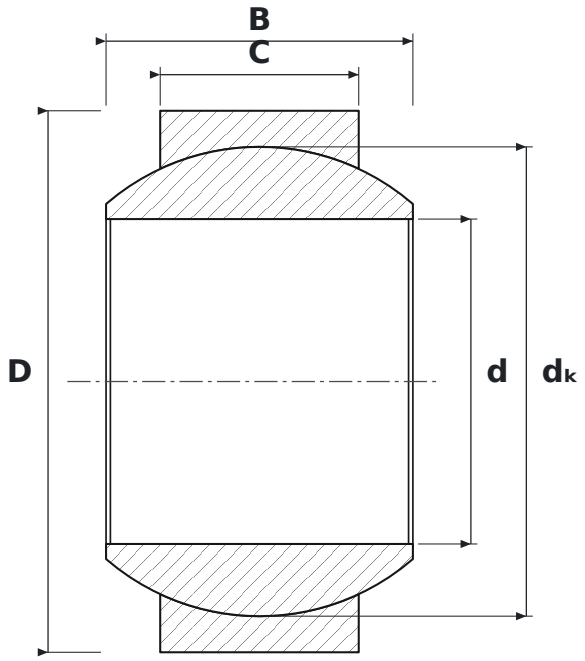

DIMENSIONS

d	bore diameter	**90 mm**
D	outside diameter	**150 mm**
B	inner ring (ball) width	**85 mm**
C	outer ring width	**55 mm**
dK	ball diameter	**130 mm**

SPECIFICATIONS

Manufacturer	**INNE**
Manufacturer designation	**DGE90 FW2RS**
C – outer ring width	**55 mm**
Rolling elements	**plain bearing (no rolling elements)**
Mass	**5.4 kg**