Spherical plain bearing DGEG180 ES INNE

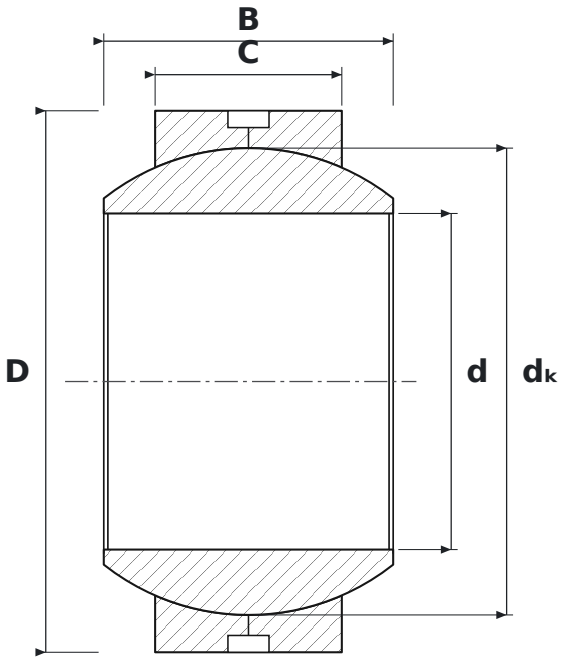

DIMENSIONS

d	bore diameter	**180 mm**
D	outside diameter	**290 mm**
B	inner ring (ball) width	**155 mm**
C	outer ring width	**100 mm**
dK	ball diameter	**250 mm**

SPECIFICATIONS

Manufacturer	**INNE**
Manufacturer designation	**DGEG180 ES**
C – outer ring width	**100 mm**
Rolling elements	**plain bearing (no rolling elements)**
E	**reinforced design, higher load rating**
Seal	**open – no seals**
Features	**Lubrication groove and holes**
Mass	**35.4 kg**