Spherical plain bearing DGEZ15 ES INNE

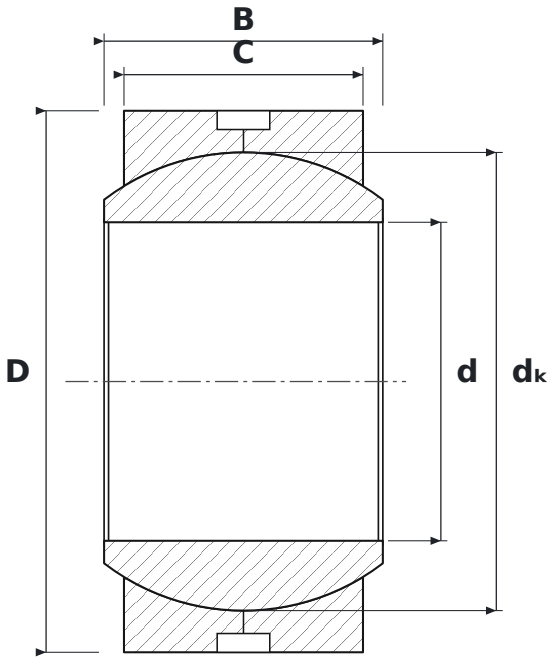

DIMENSIONS

d	bore diameter	**15.88 mm**
D	outside diameter	**26.99 mm**
B	inner ring (ball) width	**13.89 mm**
C	outer ring width	**11.91 mm**
dK	ball diameter	**22.84 mm**

SPECIFICATIONS

Manufacturer	**INNE**
Manufacturer designation	**DGEZ15 ES**
C – outer ring width	**11.91 mm**
Rolling elements	**plain bearing (no rolling elements)**
Features	**Lubrication groove and holes**
Mass	**0.036 kg**