Spherical plain bearing DGEZ31 ES2RS INNE

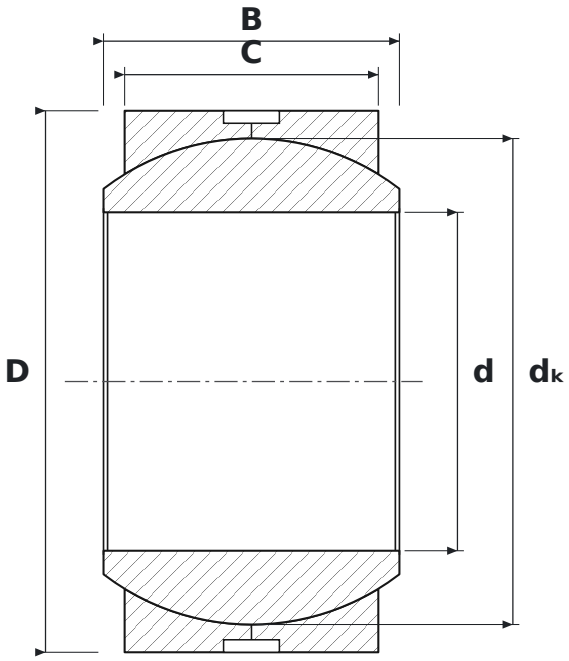

DIMENSIONS

d	bore diameter	**31.75 mm**
D	outside diameter	**50.8 mm**
B	inner ring (ball) width	**27.76 mm**
C	outer ring width	**23.8 mm**
dK	ball diameter	**45.59 mm**

SPECIFICATIONS

Manufacturer	**INNE**
Manufacturer designation	**DGEZ31 ES2RS**
C – outer ring width	**23.8 mm**
Rolling elements	**plain bearing (no rolling elements)**
Features	**Lubrication groove and holes**
Mass	**0.232 kg**