Spherical plain bearing DGEZ69 ES INNE

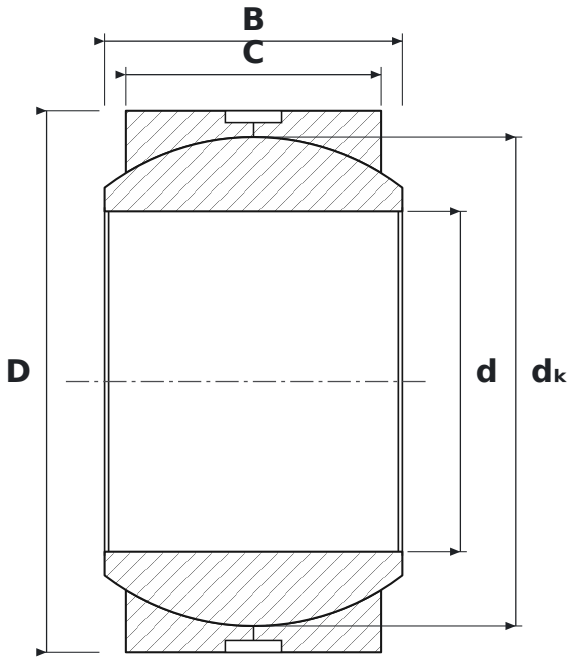

DIMENSIONS

d	bore diameter	**69.85 mm**
D	outside diameter	**111.13 mm**
B	inner ring (ball) width	**61.11 mm**
C	outer ring width	**52.39 mm**
dK	ball diameter	**100.33 mm**

SPECIFICATIONS

Manufacturer	**INNE**
Manufacturer designation	**DGEZ69 ES**
C – outer ring width	**52.39 mm**
Rolling elements	**plain bearing (no rolling elements)**
Features	**Lubrication groove and holes**
Mass	**2.42 kg**