Spherical plain bearing DGEZ95 ES2RS INNE

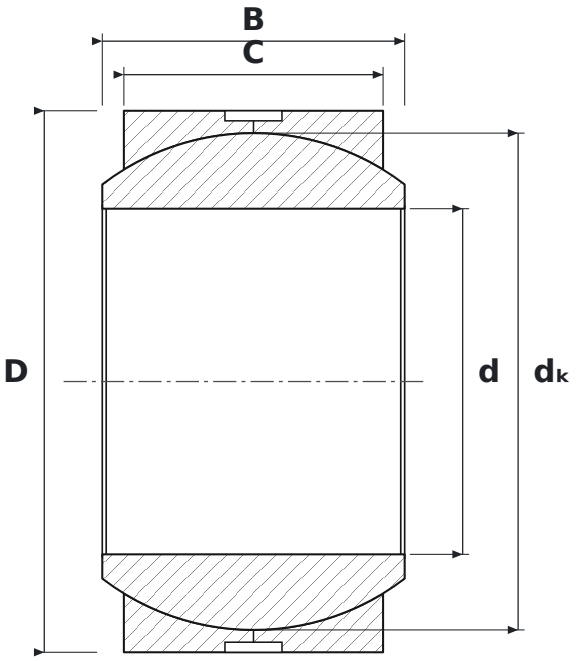

DIMENSIONS

d	bore diameter	**95.25 mm**
D	outside diameter	**149.23 mm**
B	inner ring (ball) width	**83.34 mm**
C	outer ring width	**71.44 mm**
dK	ball diameter	**136.91 mm**

SPECIFICATIONS

Manufacturer	**INNE**
Manufacturer designation	**DGEZ95 ES2RS**
C – outer ring width	**71.44 mm**
Rolling elements	**plain bearing (no rolling elements)**
Features	**Lubrication groove and holes**
Mass	**5.8 kg**