Spherical plain bearing GAC110 F SKF

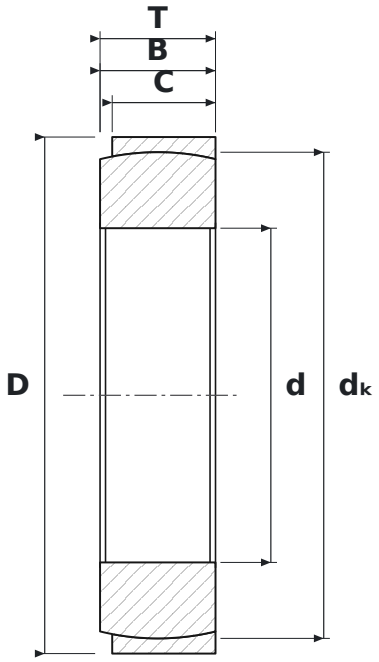

DIMENSIONS

d	bore diameter	**110 mm**
D	outside diameter	**170 mm**
T	total width	**38 mm**
B	inner ring (ball) width	**38 mm**
C	outer ring width	**34 mm**
dK	ball diameter	**160 mm**

SPECIFICATIONS

Manufacturer	**SKF**
Manufacturer designation	**GAC110 F**
B – inner ring width	**38 mm**
C – outer ring width	**34 mm**
Rolling elements	**plain bearing (no rolling elements)**
Seal	**open – no seals**
Mass	**3.401 kg**