Spherical plain bearing GAC30 F SKF

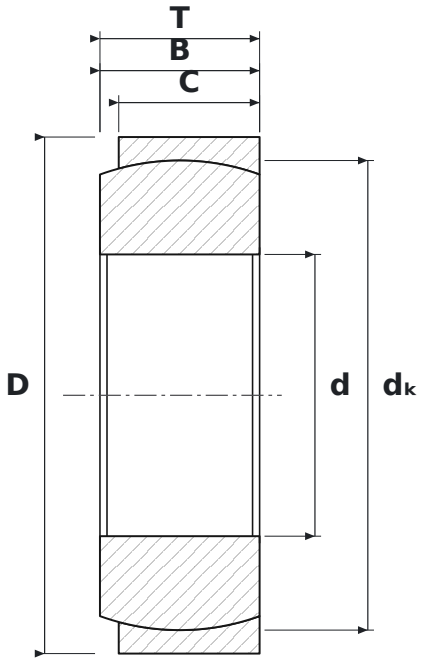

DIMENSIONS

d	bore diameter	**30 mm**
D	outside diameter	**55 mm**
T	total width	**17 mm**
B	inner ring (ball) width	**17 mm**
C	outer ring width	**15 mm**
dK	ball diameter	**50 mm**

SPECIFICATIONS

Manufacturer	**SKF**
Manufacturer designation	**GAC30 F**
B – inner ring width	**17 mm**
C – outer ring width	**15 mm**
Rolling elements	**plain bearing (no rolling elements)**