Spherical plain bearing GAC60 F SKF

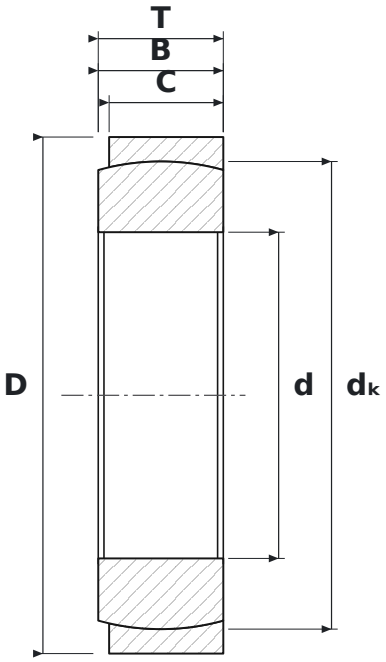

DIMENSIONS

d	bore diameter	**60 mm**
D	outside diameter	**95 mm**
T	total width	**23 mm**
B	inner ring (ball) width	**23 mm**
C	outer ring width	**21 mm**
dK	ball diameter	**86 mm**

SPECIFICATIONS

Manufacturer	**SKF**
Manufacturer designation	**GAC60 F**
B – inner ring width	**23 mm**
C – outer ring width	**21 mm**
Rolling elements	**plain bearing (no rolling elements)**