Spherical plain bearing GE100 SW ZEN

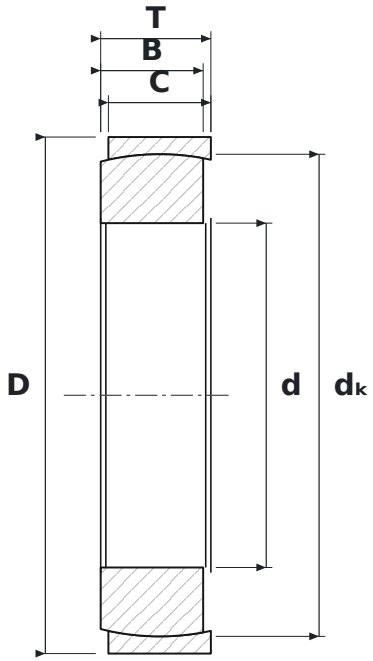

DIMENSIONS

d	bore diameter	**100 mm**
D	outside diameter	**150 mm**
T	total width	**32 mm**
B	inner ring (ball) width	**32 mm**
dK	ball diameter	**140 mm**

SPECIFICATIONS

Manufacturer	**ZEN**
Manufacturer designation	**GE100 SW**
Rolling elements	**plain bearing (no rolling elements)**
Seal	**open – no seals**
Mass	**2.37 kg**