Spherical plain bearing GE120 AW ZEN

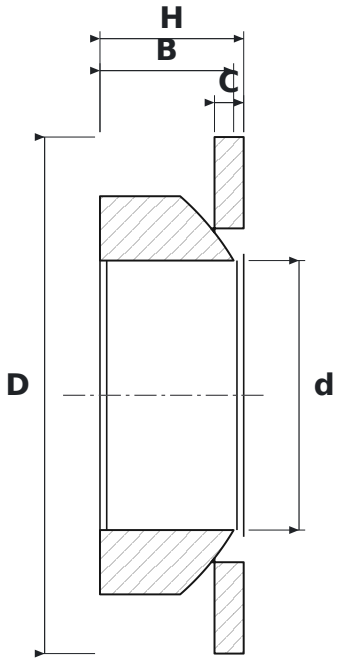

DIMENSIONS

d	bore diameter	**120 mm**
D	outside diameter	**230 mm**
H	height	**64 mm**
B	inner ring (ball) width	**64 mm**
C	outer ring width	**13 mm**

SPECIFICATIONS

Manufacturer	**ZEN**
Manufacturer designation	**GE120 AW**
C – outer ring width	**13 mm**
Rolling elements	**plain bearing (no rolling elements)**
Seal	**open – no seals**
Mass	**13 kg**