Spherical plain bearing GE120-DO-2RS-A-C3 INA

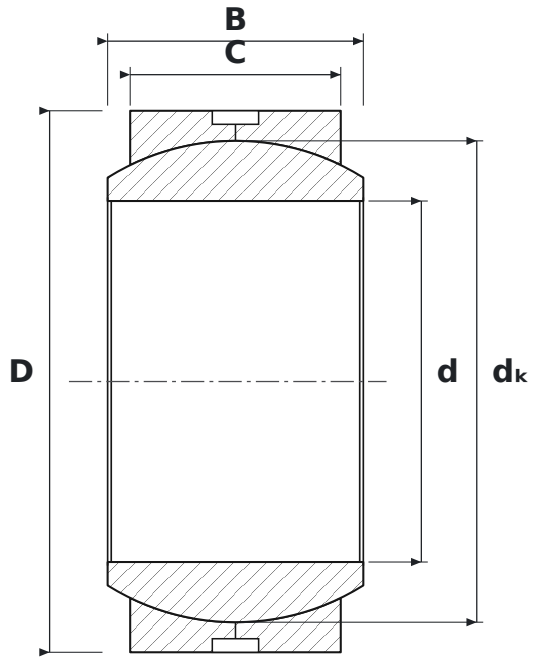

DIMENSIONS

d	bore diameter	**120 mm**
D	outside diameter	**180 mm**
B	inner ring (ball) width	**85 mm**
C	outer ring width	**70 mm**
dK	ball diameter	**160 mm**

WHAT GE120-DO-2RS-A-C3 MEANS

DO	przegub poprzeczny wymagający smarowania, skojarzenie ślizgowe stal/stal
2RS	contact rubber seals, both sides
C3	radial clearance greater than normal

SPECIFICATIONS

Manufacturer	**INA**
Manufacturer designation	**GE120-DO-2RS-A-C3**
B – inner ring width	**85 mm**
C – outer ring width	**70 mm**
Rolling elements	**plain bearing (no rolling elements)**