Spherical plain bearing GE120 SX INA

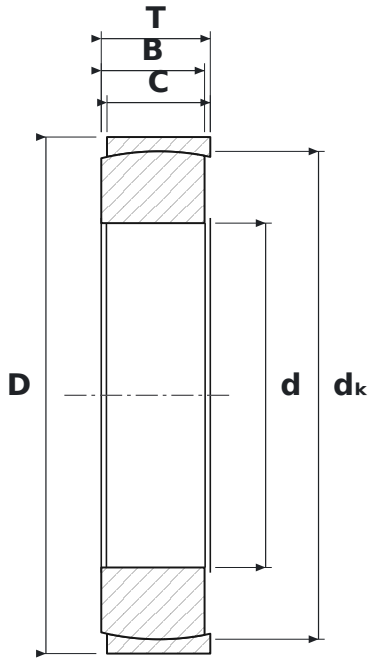

DIMENSIONS

d	bore diameter	**120 mm**
D	outside diameter	**180 mm**
T	total width	**38 mm**
B	inner ring (ball) width	**36 mm**
C	outer ring width	**36 mm**
dK	ball diameter	**170 mm**

SPECIFICATIONS

Manufacturer	**INA**
Manufacturer designation	**GE120 SX**
B – inner ring width	**36 mm**
C – outer ring width	**36 mm**
Rolling elements	**plain bearing (no rolling elements)**
Seal	**open – no seals**
Features	**Lubrication groove and holes**
Basic dynamic load rating C	**510 kN**
Basic static load rating C0	**2,550 kN**