Spherical plain bearing GE120 TXA-2LS SKF

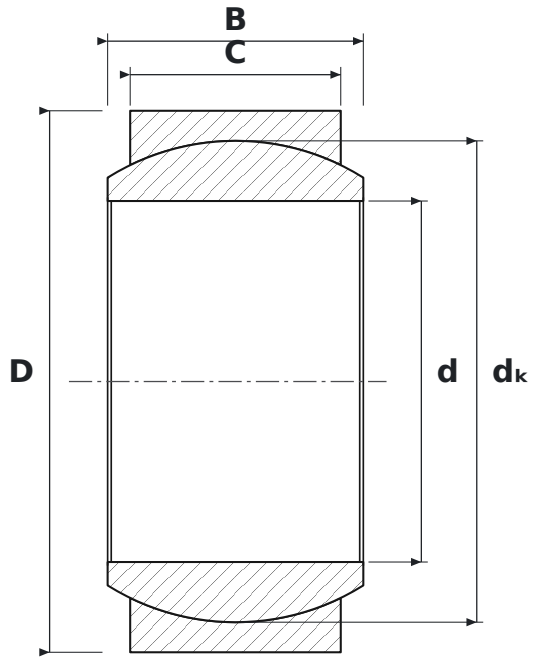

DIMENSIONS

d	bore diameter	**120 mm**
D	outside diameter	**180 mm**
B	inner ring (ball) width	**85 mm**
C	outer ring width	**70 mm**
dK	ball diameter	**160 mm**

SPECIFICATIONS

Manufacturer	**SKF**
Manufacturer designation	**GE120 TXA-2LS**
C – outer ring width	**70 mm**
Rolling elements	**plain bearing (no rolling elements)**
2RS	**uszczelnienia dwuwargowe stykowe, dwustronne**