Spherical plain bearing GE120 UK2RS INA

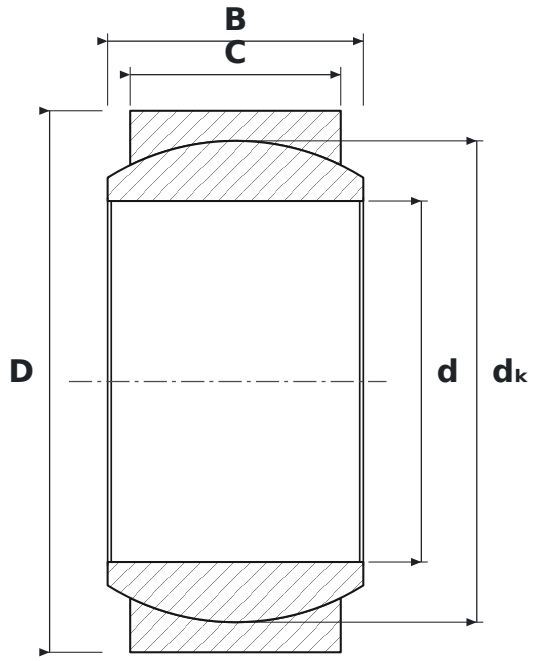

DIMENSIONS

d	bore diameter	**120 mm**
D	outside diameter	**180 mm**
B	inner ring (ball) width	**85 mm**
C	outer ring width	**70 mm**
dK	ball diameter	**160 mm**

SPECIFICATIONS

Manufacturer	**INA**
Manufacturer designation	**GE120 UK2RS**
B – inner ring width	**85 mm**
C – outer ring width	**70 mm**
Rolling elements	**plain bearing (no rolling elements)**
K	**tapered bore, taper 1:12**
2RS	**contact rubber seals, both sides**
Basic dynamic load rating C	**1,340 kN**
Basic static load rating C0	**2,700 kN**
Mass	**8.1 kg**