Spherical plain bearing GE125 LO INA

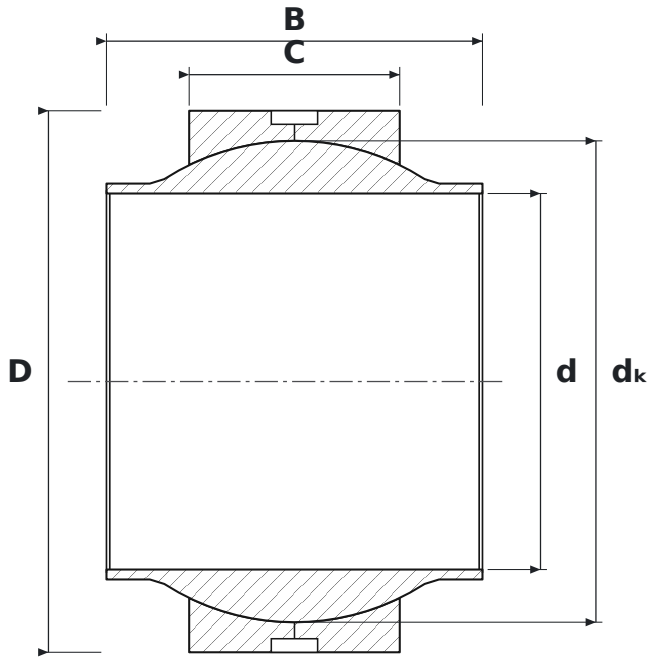

DIMENSIONS

d	bore diameter	**125 mm**
D	outside diameter	**180 mm**
B	inner ring (ball) width	**125 mm**
C	outer ring width	**70 mm**
dK	ball diameter	**160 mm**

SPECIFICATIONS

Manufacturer	**INA**
Manufacturer designation	**GE125 LO**
B – inner ring width	**125 mm**
C – outer ring width	**70 mm**
Rolling elements	**plain bearing (no rolling elements)**
Seal	**open – no seals**
Features	**Lubrication groove and holes**
Basic dynamic load rating C	**950 kN**
Basic static load rating C0	**4,750 kN**