Spherical plain bearing GE14 PW ZEN

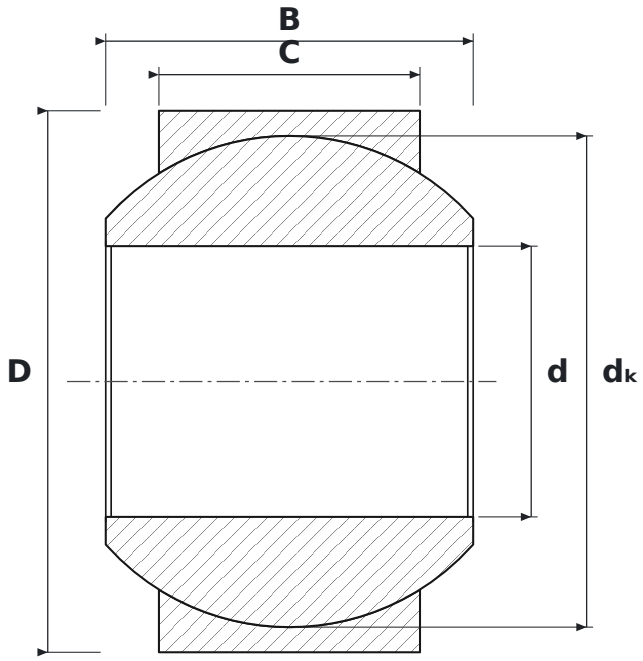

DIMENSIONS

d	bore diameter	**14 mm**
D	outside diameter	**28 mm**
B	inner ring (ball) width	**19 mm**
C	outer ring width	**13.5 mm**
dK	ball diameter	**25.4 mm**

SPECIFICATIONS

Manufacturer	**ZEN**
Manufacturer designation	**GE14 PW**
C – outer ring width	**13.5 mm**
Rolling elements	**plain bearing (no rolling elements)**