Spherical plain bearing GE140-UK-2TS INA

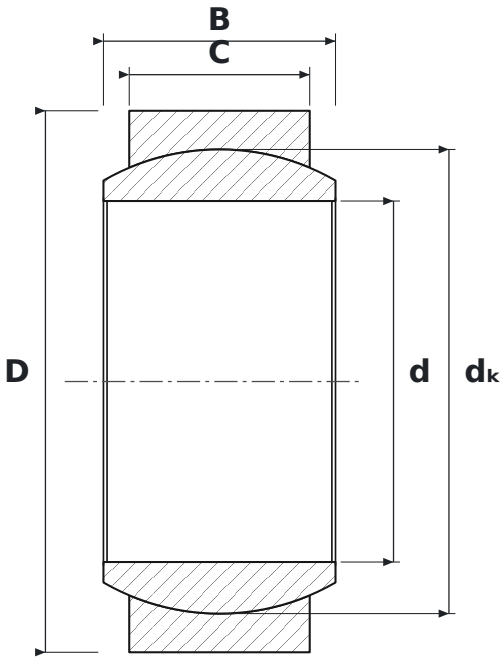

DIMENSIONS

d	bore diameter	**140 mm**
D	outside diameter	**210 mm**
B	inner ring (ball) width	**90 mm**
C	outer ring width	**70 mm**
dK	ball diameter	**180 mm**

SPECIFICATIONS

Manufacturer	**INA**
Manufacturer designation	**GE140-UK-2TS**
B – inner ring width	**90 mm**
C – outer ring width	**70 mm**
Rolling elements	**plain bearing (no rolling elements)**
K	**tapered bore, taper 1:12**
Seal	**open – no seals**
Basic dynamic load rating C	**1,500 kN**
Basic static load rating C0	**3,000 kN**