Spherical plain bearing GE15 C SKF

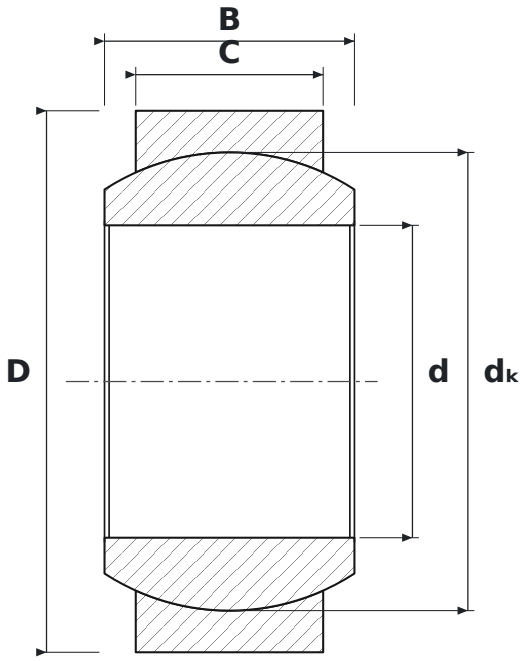

DIMENSIONS

d	bore diameter	**15 mm**
D	outside diameter	**26 mm**
B	inner ring (ball) width	**12 mm**
C	outer ring width	**9 mm**
dK	ball diameter	**22 mm**

SPECIFICATIONS

Manufacturer	**SKF**
Manufacturer designation	**GE15 C**
C – outer ring width	**9 mm**
Rolling elements	**plain bearing (no rolling elements)**
Mass	**0.027 kg**