Spherical plain bearing GE16 PW ZEN

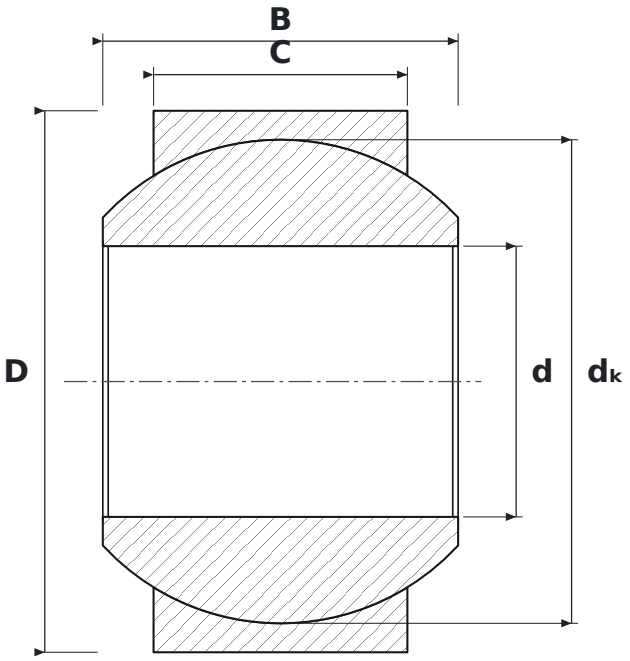

DIMENSIONS

d	bore diameter	**16 mm**
D	outside diameter	**32 mm**
B	inner ring (ball) width	**21 mm**
C	outer ring width	**15 mm**
dK	ball diameter	**28.58 mm**

SPECIFICATIONS

Manufacturer	**ZEN**
Manufacturer designation	**GE16 PW**
C – outer ring width	**15 mm**
Rolling elements	**plain bearing (no rolling elements)**
Mass	**0.038 kg**