Spherical plain bearing GE160 DO ZEN

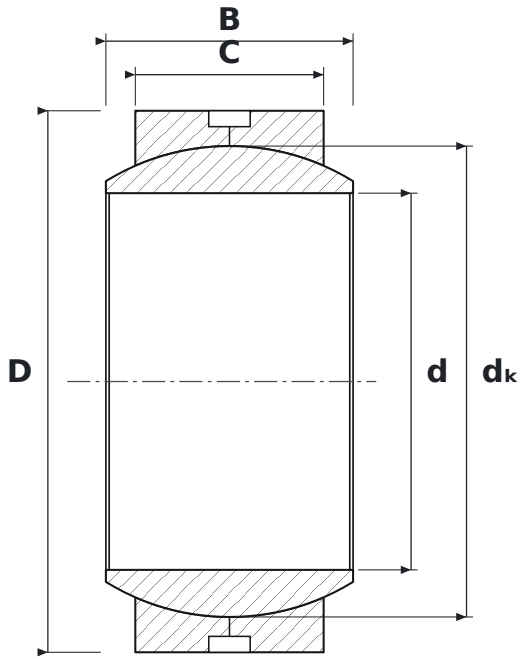

DIMENSIONS

d	bore diameter	**160 mm**
D	outside diameter	**230 mm**
B	inner ring (ball) width	**105 mm**
C	outer ring width	**80 mm**
dK	ball diameter	**200 mm**

SPECIFICATIONS

Manufacturer	**ZEN**
Manufacturer designation	**GE160 DO**
C – outer ring width	**80 mm**
Rolling elements	**plain bearing (no rolling elements)**
Seal	**open – no seals**
Features	**Lubrication groove and holes**
Mass	**14 kg**