# Spherical plain bearing GE160-SW-A INA

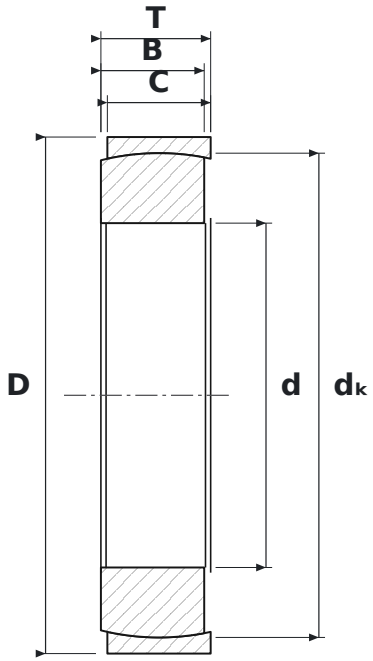


## DIMENSIONS

| | | |
|---|---|---|
| **d** | bore diameter | **160 mm** |
| **D** | outside diameter | **240 mm** |
| **T** | total width | **51 mm** |
| **B** | inner ring (ball) width | **48 mm** |
| **C** | outer ring width | **48 mm** |
| **dK** | ball diameter | **225 mm** |

## SPECIFICATIONS

| | |
|---|---|
| Manufacturer | **INA** |
| Manufacturer designation | **GE160-SW-A** |
| B – inner ring width | **48 mm** |
| C – outer ring width | **48 mm** |
| Rolling elements | **plain bearing (no rolling elements)** |
| Seal | **open – no seals** |
| Basic dynamic load rating C | **1,340 kN** |
| Basic static load rating C0 | **2,700 kN** |