Spherical plain bearing GE160 UK2RS ZEN

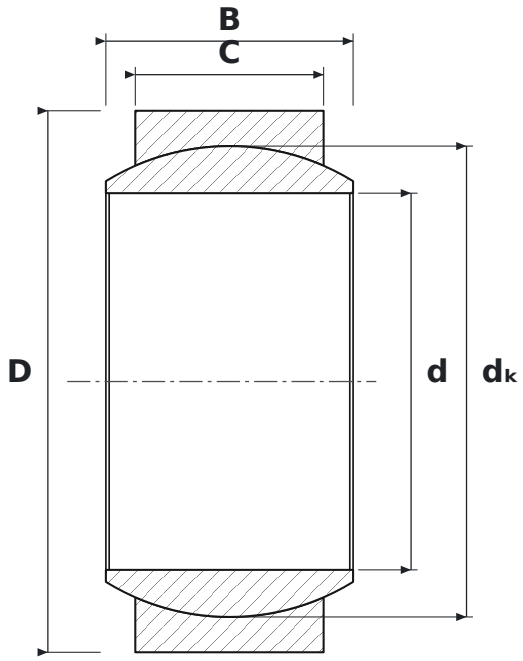

DIMENSIONS

d	bore diameter	**160 mm**
D	outside diameter	**230 mm**
B	inner ring (ball) width	**105 mm**
C	outer ring width	**80 mm**
dK	ball diameter	**200 mm**

SPECIFICATIONS

Manufacturer	**ZEN**
Manufacturer designation	**GE160 UK2RS**
C – outer ring width	**80 mm**
Rolling elements	**plain bearing (no rolling elements)**
K	**tapered bore, taper 1:12**
2RS	**uszczelnienia stykowe z gumy syntetycznej, dwustronne (od −20 do +110 °C)**
Mass	**13.8 kg**