Spherical plain bearing GE18 PW ZEN

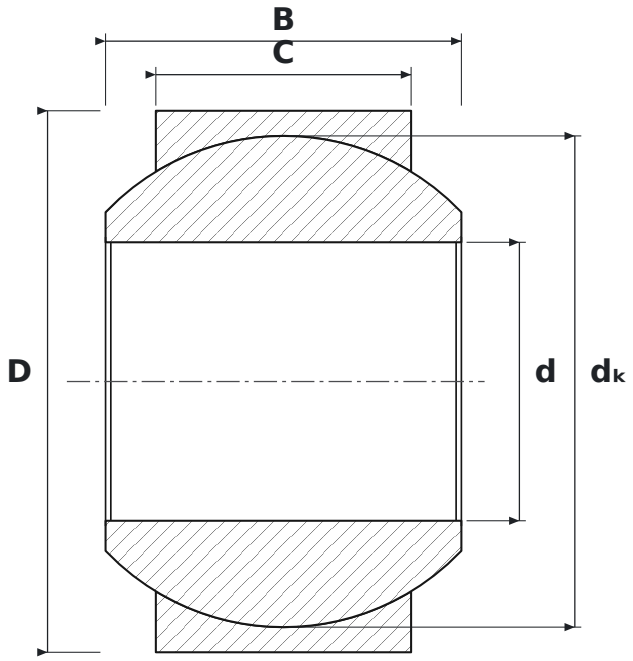

DIMENSIONS

d	bore diameter	**18 mm**
D	outside diameter	**35 mm**
B	inner ring (ball) width	**23 mm**
C	outer ring width	**16.5 mm**
dK	ball diameter	**31.75 mm**

SPECIFICATIONS

Manufacturer	**ZEN**
Manufacturer designation	**GE18 PW**
C – outer ring width	**16.5 mm**
Rolling elements	**plain bearing (no rolling elements)**
Mass	**0.1 kg**