# Spherical plain bearing GE20 ES2RS NKE

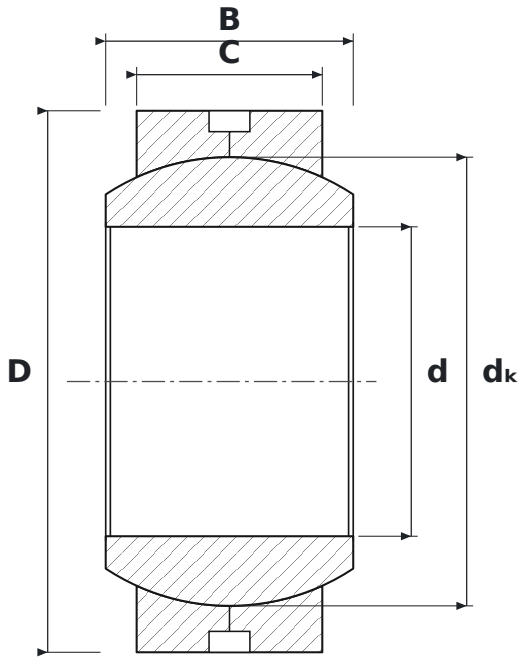


## DIMENSIONS

| | | |
|---|---|---|
| **d** | bore diameter | **20 mm** |
| **D** | outside diameter | **35 mm** |
| **B** | inner ring (ball) width | **16 mm** |
| **C** | outer ring width | **12 mm** |
| **dK** | ball diameter | **29 mm** |

## SPECIFICATIONS

| | |
|---|---|
| Manufacturer | **NKE** |
| Manufacturer designation | **GE20 ES2RS** |
| C – outer ring width | **12 mm** |
| Rolling elements | **plain bearing (no rolling elements)** |
| Features | **Lubrication groove and holes** |