Spherical plain bearing GE20 PW ZEN

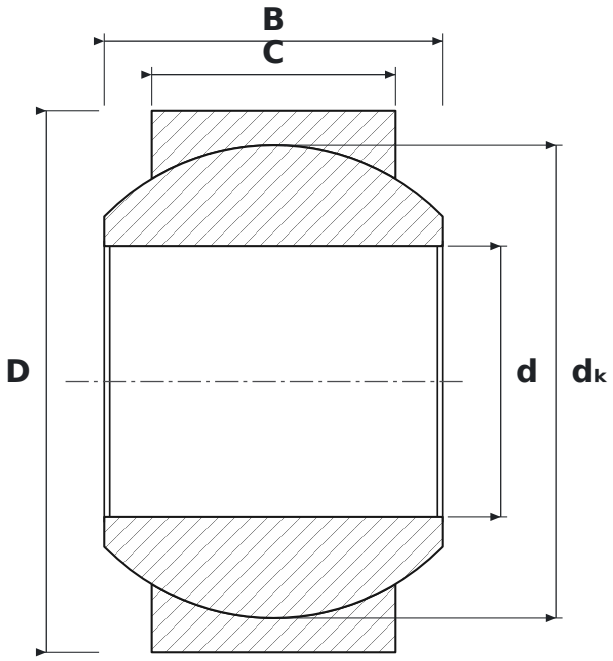

DIMENSIONS

d	bore diameter	**20 mm**
D	outside diameter	**40 mm**
B	inner ring (ball) width	**25 mm**
C	outer ring width	**18 mm**
dK	ball diameter	**34.93 mm**

SPECIFICATIONS

Manufacturer	**ZEN**
Manufacturer designation	**GE20 PW**
C – outer ring width	**18 mm**
Rolling elements	**plain bearing (no rolling elements)**
Mass	**0.15 kg**