Spherical plain bearing GE200-DO-C3 INA

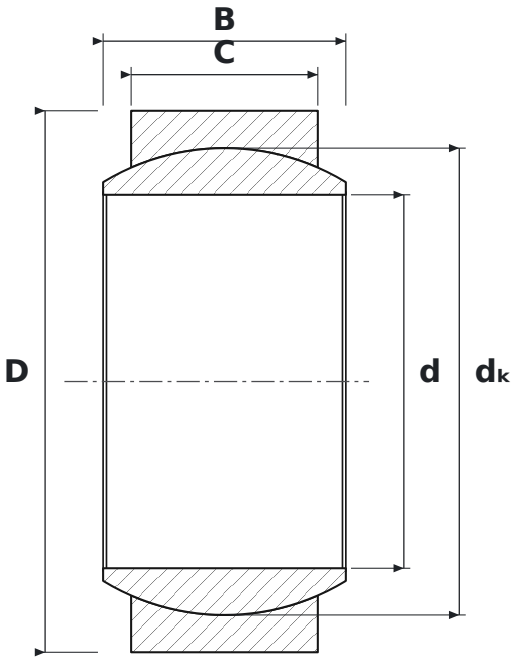

DIMENSIONS

d	bore diameter	**200 mm**
D	outside diameter	**290 mm**
B	inner ring (ball) width	**130 mm**
C	outer ring width	**100 mm**
dK	ball diameter	**250 mm**

WHAT GE200-DO-C3 MEANS

DO	przegub poprzeczny wymagający smarowania, skojarzenie ślizgowe stal/stal
C3	radial clearance greater than normal

SPECIFICATIONS

Manufacturer	**INA**
Manufacturer designation	**GE200-DO-C3**
B – inner ring width	**130 mm**
C – outer ring width	**100 mm**
Rolling elements	**plain bearing (no rolling elements)**