Spherical plain bearing GE200 DO INA

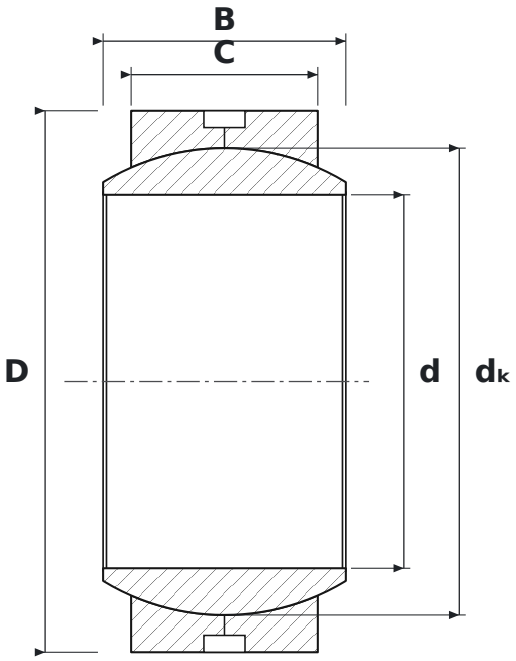

DIMENSIONS

d	bore diameter	**200 mm**
D	outside diameter	**290 mm**
B	inner ring (ball) width	**130 mm**
C	outer ring width	**100 mm**
dK	ball diameter	**250 mm**

SPECIFICATIONS

Manufacturer	**INA**
Manufacturer designation	**GE200 DO**
B – inner ring width	**130 mm**
C – outer ring width	**100 mm**
Rolling elements	**plain bearing (no rolling elements)**
Seal	**open – no seals**
Features	**Lubrication groove and holes**