Spherical plain bearing GE200 DO2RS ZEN

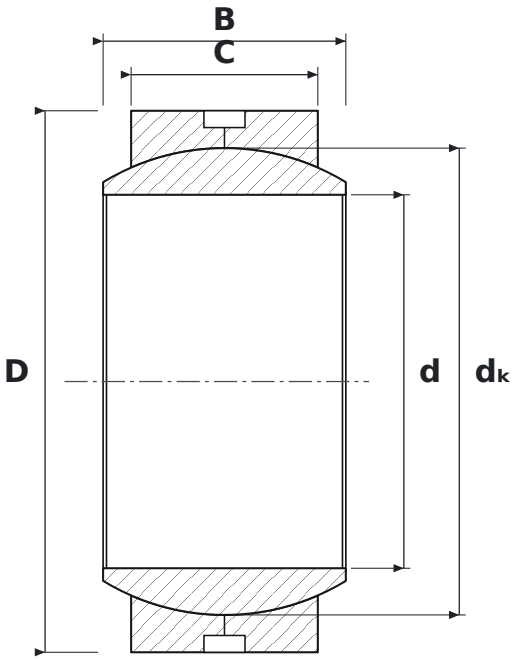

DIMENSIONS

d	bore diameter	**200 mm**
D	outside diameter	**290 mm**
B	inner ring (ball) width	**130 mm**
C	outer ring width	**100 mm**
dK	ball diameter	**250 mm**

SPECIFICATIONS

Manufacturer	**ZEN**
Manufacturer designation	**GE200 DO2RS**
C – outer ring width	**100 mm**
Rolling elements	**plain bearing (no rolling elements)**
2RS	**uszczelnienia stykowe z gumy syntetycznej, dwustronne (od −20 do +110 °C)**
Features	**Lubrication groove and holes**
Mass	**28.3 kg**