Spherical plain bearing GE200-ES-2RS NKE

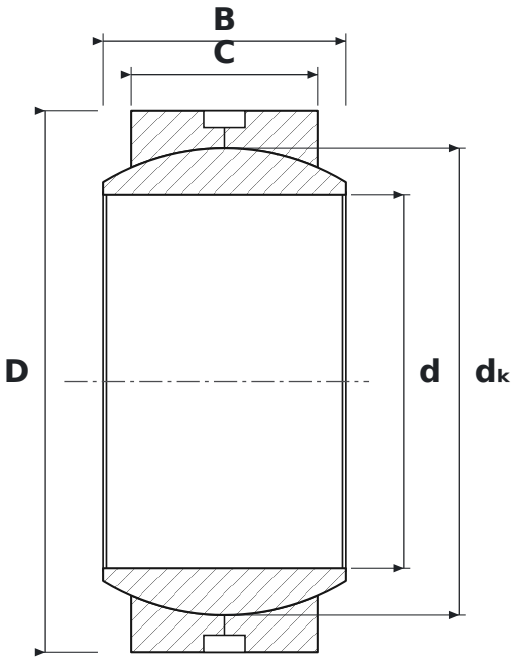

DIMENSIONS

d	bore diameter	**200 mm**
D	outside diameter	**290 mm**
B	inner ring (ball) width	**130 mm**
C	outer ring width	**100 mm**
dK	ball diameter	**250 mm**

SPECIFICATIONS

Manufacturer	**NKE**
Manufacturer designation	**GE200-ES-2RS**
C – outer ring width	**100 mm**
Rolling elements	**plain bearing (no rolling elements)**
E	**reinforced design, higher load rating**
2RS	**contact rubber seals, both sides**
Features	**Lubrication groove and holes**