Spherical plain bearing GE200-UK-2TS INA

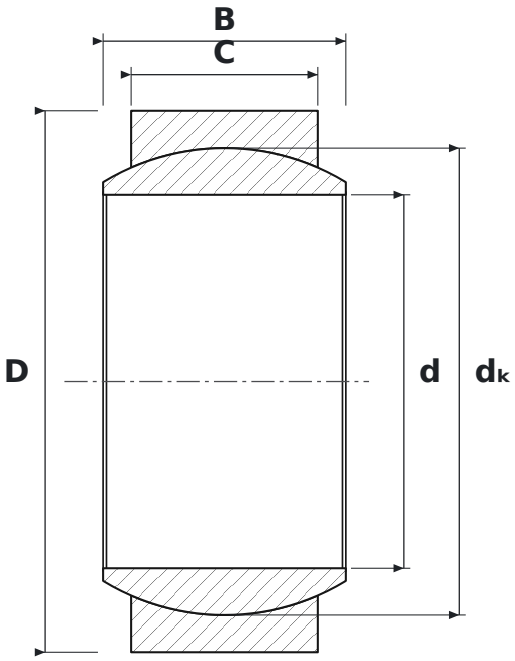

DIMENSIONS

d	bore diameter	**200 mm**
D	outside diameter	**290 mm**
B	inner ring (ball) width	**130 mm**
C	outer ring width	**100 mm**
dK	ball diameter	**250 mm**

SPECIFICATIONS

Manufacturer	**INA**
Manufacturer designation	**GE200-UK-2TS**
B – inner ring width	**130 mm**
C – outer ring width	**100 mm**
Rolling elements	**plain bearing (no rolling elements)**
K	**tapered bore, taper 1:12**
Seal	**open – no seals**
Basic dynamic load rating C	**3,000 kN**
Basic static load rating C0	**6,000 kN**